# TECHNICAL DATA

Three Phase Electric Motors - Aluminum Frame
UM3A 132S-6 IE3
3 kW / 4 Cv
965 RPM

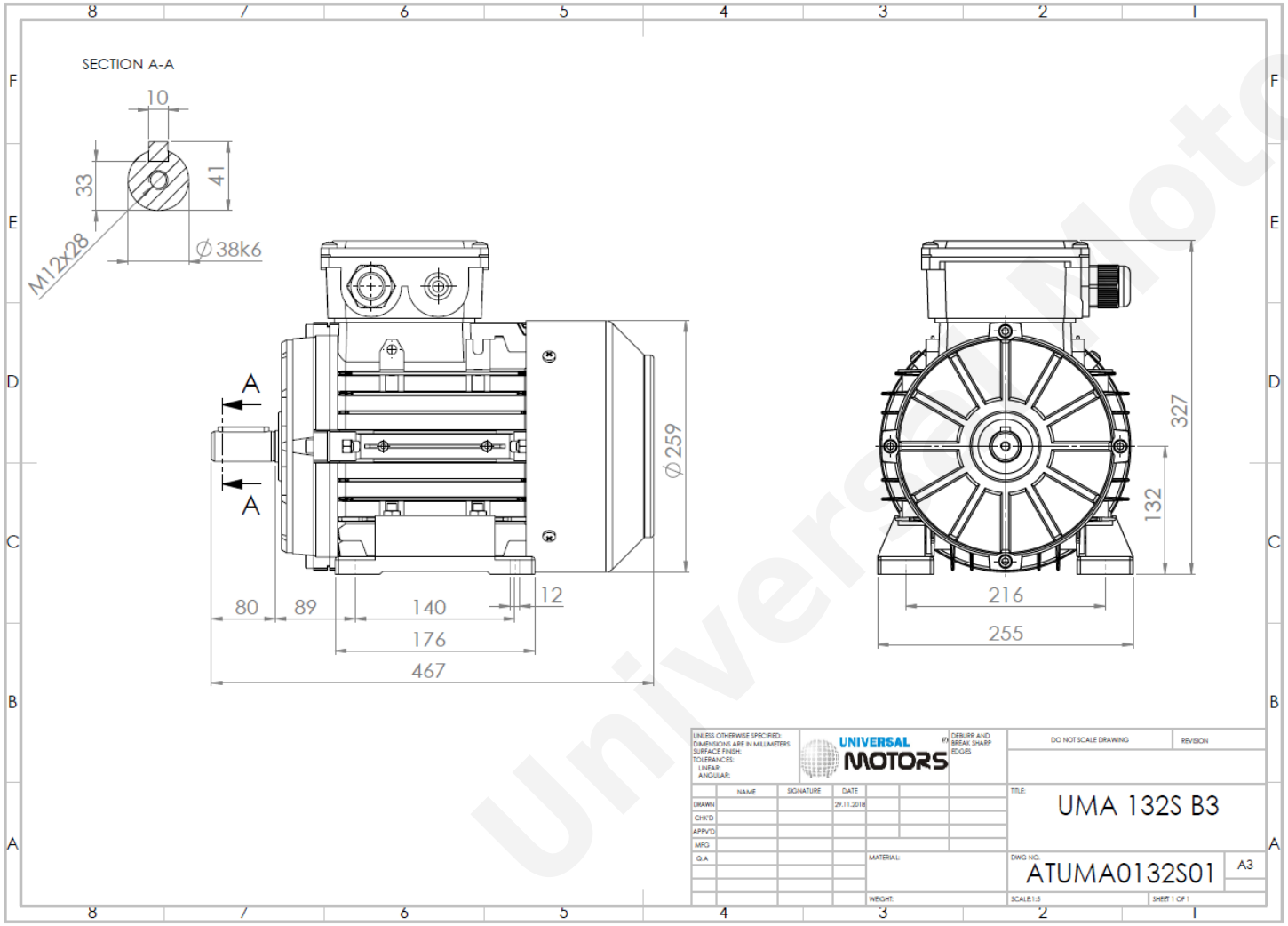


| | |
|---|---|
| Motor type: | **UM3A 132S-6 IE3** |
| Output: | **3 kW / 4 Cv** |
| Speed ($min^{-1}$): | **965 RPM** |
| Frequency: | **50 Hz** |
| Voltage: | **400 V** |
| Current: | **6.84 A** |
| Power factor (Cos Ø): | **0.74** |
| Poles: | **6** |
| Insulation class: | **F** |
| Temperature rise Class: | **B** |
| Efficiency 50%: | **85.1 %** |
| Efficiency 75%: | **86.0 %** |
| Efficiency 100%: | **85.6 %** |
| Torque: | **30 N.m** |
| Tstarting/Tnominal: | **2.0** |
| Istarting/Inominal: | **6.0** |
| Tmaximum/Tnominal: | **2.7** |
| Noise: | **64 Db(A)** |
| Weight: | **38.6 Kg** |
| Brake AC: | **AC7** |
| Torque Brake DC: | **80 N.m** |
| Bearing DE: | **6308 2Z** |
| Bearing NDE: | **6208 2Z** |
| Torque Brake AC: | **90 N.m** |
| Brake DC: | **REB-05-16** |

**Regime - S1** **Altitude - 1000m** **Environment Temperature - 40ºC**

* References applied only in the UK

## CONTACTS:


UNIVERSAL MOTORS
Rua de São Brás,745
4480-782 VILA DO CONDE
Tel: +351 252 299 080
Fax: +351 252 299 089
Mail: geral@universalmotors.pt


Universal Motors